"APPROVED FOR RELEASE: Tuesday, August 01, 2000 CIA-RDP86-00513R001344

RASKIN, I.M.; KIRZHNER, L.S.

Dynamics of protein fractions in the blood serum during the treatment of Botkin's disease with vitamins B6 and B12. Terap. arkh. 32 no. 7:72-78 Jl '60. (MIRA 14:1)

(BLOOD PROTEINS) (HEPATITIS, INFECTIOUS) (PYRIDOXINE) (CYANOCOBALAMINE)

APPROVED FOR RELEASE: Tuesday, August 01, 2000 CIA-RDP86-00513R0013442

"APPROVED FOR RELEASE: Tuesday, August 01, 2000 CIA-RDP86-00513R001344

BREMENER, S.M.; GORDON, R.I.; KIRZHNER, L.S.; KURASHEVA, D.B.; RASKIN, I.M. (Moskva)

Use of vitamin B_{12} in Botkin's disease. Klin.med. 38 no.12:100-106 D '60. (MIRA 14:2)

1. Iz klinicheskogo otdela Gosudarstvennogo nauchno-issledovatel'skogo instituta vitaminologii Ministerstva zdravookhraneniya SSSR (rukovoditel' - deystvitel'nyy chlen AMN SSSR prof. M.S. Vovsi [deceased]) i Gorodskoy infektsionnoy klinicheskoy bol'nitsy No.2 (zaveduyushchaya chetvertym korpusom D.B. Kurasheva).
(CYANOCOBALAMINE) (HEPATITIS, INFECTIOUS)

APPROVED FOR RELEASE: Tuesday, August 01, 2000 CIA-RDP86-00513R0013442

"APPROVED FOR RELEASE: Tuesday, August 01, 2000 CIA-RDP86-00513R001344

RASKIN, I.M.

Magnitude of nicotinic acid requirements in man. Vop. pit. 20 no.5:79-84 S-O '61. (MIRA 14:10)

1. Iz Gosudarstvennogo nauchno-issledovatel'skogo instituta vitaminologii Ministerstva zdravookhraneniya SSSR, Moskva.
(NICOTINIC ACID)

APPROVED FOR RELEASE: Tuesday, August 01, 2000 CIA-RDP86-00513R0013442

"APPROVED FOR RELEASE: Tuesday, August 01, 2000 CIA-RDP86-00513R001344

RASKIN, I.M., mladshiy nauchnyy sotrudnik

Cyanobalamine and folic acid. Med. sestra 20 no.10:56-59 O '61. (MIRA 14:12)

1. Iz otdela po klinicheskomu izucheniyu vitaminov Gosudarstvennogo nauchno-issledovatel'skogo instituta vitaminologii Ministerstva zdravookhraneniya SSSR, Moskva.
(CYANOCOBALAMINE) (FOLIC ACID)

APPROVED FOR RELEASE: Tuesday, August 01, 2000 CIA-RDP86-00513R0013442

"APPROVED FOR RELEASE: Tuesday, August 01, 2000 CIA-RDP86-00513R001344

ALFEROVA, V.A.; RASKIN, I.M.

Xanthurenuria and the amount of vitamin B_6 in the blood of patients with chronic hepatitis. Vop.med.khim. 8 no.1:20-23 Ja-F '62. (MIRA 15:11)

1. Gosudarstvennyy nauchno-issledovatel'skiy institut vitaminologii Ministerstva zdravookhraneniya SSSR, Moskva.
(PYRIDOXINE) (XANTHURENIC ACID) (HEPATITIS, INFECTIOUS)

APPROVED FOR RELEASE: Tuesday, August 01, 2000 CIA-RDP86-00513R0013442

"APPROVED FOR RELEASE: Tuesday, August 01, 2000 CIA-RDP86-00513R001344

RASKIN, I.M.

Tryptophan - xanthurenic test in acute and chronic hepatitis. Vop. pit. 21 no.1:33-38 Ja-F '62. (MIRA 15:2)

1. Iz klinicheskogo otdeleniya (zav. - kand.med.nauk S.M.Bremener) Gosudarstvennogo nauchno-issledovatel'skogo instituta vitaminologii Ministerstva zdravookhraneniya SSSR, Moskva.
(HEPATITIS, INFECTIOUS) (XANTHURENIC ACID)
(TRYPTOPHAN)

APPROVED FOR RELEASE: Tuesday, August 01, 2000 CIA-RDP86-00513R0013442

"APPROVED FOR RELEASE: Tuesday, August 01, 2000 CIA-RDP86-00513R001344

BREMENER, S.M.; RASKIN, I.M.; ALFEROVA, V.A. ROGOVA, K.P.; FILIPPOVA, G.S.

Metabolism of vitamin B_6 and its effect in acute hepatitis.
Vop. med. khim. 11 no.1:22-27 Ja-F '65. (MIRA 18:10)

1. Klinicheskoye otdeleniye Ministerstva zdravookhraneniya SSSR, Moskva.

APPROVED FOR RELEASE: Tuesday, August 01, 2000 CIA-RDP86-00513R0013442

"APPROVED FOR RELEASE: Tuesday, August 01, 2000 CIA-RDP86-00513R001344

KLADO, T.N.; RASKIN, I.M.

Immanuel Kant and the St. Petersburg Academy of Sciences; on archival materials of the Academy of Sciences of the U.S.S.R. Ist.-astron. issl. no.2:369-374 '56. (MLRA 10:6)
(Kant, Immanuel, 1724-1804)

APPROVED FOR RELEASE: Tuesday, August 01, 2000 CIA-RDP86-00513R0013442

"APPROVED FOR RELEASE: Tuesday, August 01, 2000 CIA-RDP86-00513R001344

RASKIN, I. V.

"Chemistry and Technology of Pigments" (Khimiya i Tekhnologiya Pigmentov) Ye. F. Belen'kiy and I. V. Raskin, Goskhimizdat, Moscow/Leningrad, 1949, 642 pages and three enclosures, 22 rubles.

Textbook

SO: Uspekhi Khimii, Vol 18, #6, 1949; Vol 19, #1, 1950 (W-10083)

APPROVED FOR RELEASE: Tuesday, August 01, 2000 CIA-RDP86-00513R0013442

"APPROVED FOR RELEASE: Tuesday, August 01, 2000 CIA-RDP86-00513R001344

12(2), 25(1), 28(1) SOV/128-59-8-11/29

AUTHOR: Tatsiyevsky, V.V., Raskin, K.L., and Aleynik, B.Z., Engineers

TITLE: Semi-Automatic Core Shakeout Installation for Motor Cylinder Head Castings

PERIODICAL: Liteynoye proizvodstvo, 1959, Nr 8, pp 24 - 25 (USSR)

ABSTRACT: The shake-out work is one of the noisiest in processes in the factory. In order to eliminate this noise and create better working conditions, the authors have designed a semi-automatic shake-out installation which brings the motor cylinder head castings by conveyor to a vibrator. The walls of the vibrator are insulated with thick felt and rubber. There are 5 drawings.

Card 1/1

APPROVED FOR RELEASE: Tuesday, August 01, 2000 CIA-RDP86-00513R0013442

"APPROVED FOR RELEASE: Tuesday, August 01, 2000 CIA-RDP86-00513R001344

RASKIN, K.

Establishing norms for group tooling of parts. Sots.trud 6 no.3:118-123 Mr '61. (MIRA 14:3)

1. Nachal'nik normativno-issledovatel'skogo byuro otdela truda i zarbotnoy platy zavoda poligraficheskikh mashin, Leningrad.
(Leningrad--Printing machinery and supplies)

APPROVED FOR RELEASE: Tuesday, August 01, 2000 CIA-RDP86-00513R0013442

"APPROVED FOR RELEASE: Tuesday, August 01, 2000 CIA-RDP86-00513R001344

RASKIN, L.

For the library of an agronomist. Zemledelie 27 no.11:95-96 N '65.
(MIRA 18:10)

APPROVED FOR RELEASE: Tuesday, August 01, 2000 CIA-RDP86-00513R0013442

"APPROVED FOR RELEASE: Tuesday, August 01, 2000 CIA-RDP86-00513R001344

RASKIN, L.

Serial production and the establishment of consolidated norms. Sots. trud 7 no.8:79-83 Ag '62. (MIRA 15:10)

(Metal cutting—Production standards)

APPROVED FOR RELEASE: Tuesday, August 01, 2000 CIA-RDP86-00513R0013442

"APPROVED FOR RELEASE: Tuesday, August 01, 2000 CIA-RDP86-00513R001344

APPROVED FOR RELEASE: Tuesday, August 01, 2000 CIA-RDP86-00513R0013442

"APPROVED FOR RELEASE: Tuesday, August 01, 2000 CIA-RDP86-00513R001344

RASKIN, L.

Raskin, L. "The new Soviet incubator, 'Record-39'," (B. K. Goretskiy's design), Kult't.-prosv't. rabota, 1949, No. 3, p. 18-19

SO: U-4934, 29 Oct 53, (Letopis 'Zhurnal 'nykh Statey, No. 16, 1949).

APPROVED FOR RELEASE: Tuesday, August 01, 2000 CIA-RDP86-00513R0013442

"APPROVED FOR RELEASE: Tuesday, August 01, 2000 CIA-RDP86-00513R001344

RASKIN, L.

Time complex norms. Sots. trud no.3:81-84 Mr '57. (MIRA 10:4)
(Time study)

APPROVED FOR RELEASE: Tuesday, August 01, 2000 CIA-RDP86-00513R0013442

"APPROVED FOR RELEASE: Tuesday, August 01, 2000 CIA-RDP86-00513R001344

RASKIN, L.; DOBROLYUBSKIY, A.

Give more attention to current work on the establishment of work norms. Sots. trud 5 no.5:88-94 My '60. (MIRA 13:11)
(Moscow--Machinery industry--Production standards)

APPROVED FOR RELEASE: Tuesday, August 01, 2000 CIA-RDP86-00513R0013442

"APPROVED FOR RELEASE: Tuesday, August 01, 2000 CIA-RDP86-00513R001344

RASKIN, L.

GORDON, Kh.; RASKIN, L.

Necessary reference work for factory workers ("Technical establishment of norms in machine tool and machine shop work" by T.V.Tolchenov. Reviewed by Kh.Gordon, L. Raskin). Sots.trud no.9:151-156 S '57. (MIRA 10:9)

(Machine shop practice--Production standards)

APPROVED FOR RELEASE: Tuesday, August 01, 2000 CIA-RDP86-00513R0013442

"APPROVED FOR RELEASE: Tuesday, August 01, 2000 CIA-RDP86-00513R001344

RASKIN, Lev

Photography of flowers. Sov.foto 20 no.8:25 Ag '60. (MIRA 13:8)
(Photography of plants)

APPROVED FOR RELEASE: Tuesday, August 01, 2000 CIA-RDP86-00513R0013442

"APPROVED FOR RELEASE: Tuesday, August 01, 2000 CIA-RDP86-00513R001344

BANNIKOV, Nikolay Anisimovich; RASKIN, Leopol'd Moiseyevich; NIKANOROVA, Ye.V., red.; CHICHERIN, A.N., tekhn.red.

[Agricultural literature; a manual for workers with books] Sel'skokhoziaistvennaia literatura; posobie dlia knizhnykh rabotnikov. Moskva, Gos.izd-vo "Iskusstvo," 1958. 242 p. (Knizhnomu rabotniku o knigakh) (MIRA 11:12)
(Bibliography--Agriculture)

APPROVED FOR RELEASE: Tuesday, August 01, 2000 CIA-RDP86-00513R0013442

"APPROVED FOR RELEASE: Tuesday, August 01, 2000 CIA-RDP86-00513R001344

RASKIN, L. M., ed.

More fruits, berries, and grapes. Moskva, Gos. izd-vo sel'khoz. lit-ry, 1954. 287 p.

1. Fruit culture - Russia.
2. Berries.
3. Viticulture - Russia.

APPROVED FOR RELEASE: Tuesday, August 01, 2000 CIA-RDP86-00513R0013442

"APPROVED FOR RELEASE: Tuesday, August 01, 2000 CIA-RDP86-00513R001344

RASKIN, L. M., ed.

For an abundance of potatoes and vegetables

1. Potatoes - Russia.

2. Vegetable gardening - Russia.

APPROVED FOR RELEASE: Tuesday, August 01, 2000 CIA-RDP86-00513R0013442

"APPROVED FOR RELEASE: Tuesday, August 01, 2000 CIA-RDP86-00513R001344

RASKIN, L.L.; KOSINSKIY, V.V., inzhener-zemleustroitel'; KEKUKH, A.M.

Reviews and bibliography. Zemledelie 27 no.2:94-96 F '65. (MIRA 13:4)

1. Ukrainskiy nauchno-issledovatel'skiy gidrometeorologicheskiy institut (for Kekukh).

APPROVED FOR RELEASE: Tuesday, August 01, 2000 CIA-RDP86-00513R0013442

"APPROVED FOR RELEASE: Tuesday, August 01, 2000 CIA-RDP86-00513R001344

RASKIN, L. N. ed.

More fruits, berries, and grapes

1. Fruit-culture - Russia. I. Rossoshanskii, A.A., jt. ed.

SB354.6.R9R28

APPROVED FOR RELEASE: Tuesday, August 01, 2000 CIA-RDP86-00513R0013442

"APPROVED FOR RELEASE: Tuesday, August 01, 2000 CIA-RDP86-00513R001344

MASHIN, L. N.

28539

Volbshye Vyrashchivatb Posadochnogo Matyerialb (K Itogam Vsyeros Sovyeshchaniya Diryektorov Plodopitomn Sovkhozov Iyung 1949 G) Sadi Ogorod, 1949, No. 9, S. 14-16

SO: LETOPIS NO. 38

APPROVED FOR RELEASE: Tuesday, August 01, 2000 CIA-RDP86-00513R0013442

"APPROVED FOR RELEASE: Tuesday, August 01, 2000 CIA-RDP86-00513R001344

RASKIN, L. M.

23410 MOI ZEMLYaKI (OB OTBORE UCHASTNIKOV VSESOYuZNOY S.-X. VYSTAVKI. SAD I OGOROD, 1949, No. 7, c. 52-59.

SO: LETOPIS NO. 31, 1949.

APPROVED FOR RELEASE: Tuesday, August 01, 2000 CIA-RDP86-00513R0013442

"APPROVED FOR RELEASE: Tuesday, August 01, 2000 CIA-RDP86-00513R001344

RASKIN, L. M.

Fertilizers and Manures

Great attention to local fertilizers. L. M. Raskin., Sad i og., no. 2, 1952.

9. Monthly List of Russian Accessions, Library of Congress, May 1952. Uncl.

APPROVED FOR RELEASE: Tuesday, August 01, 2000 CIA-RDP86-00513R0013442

"APPROVED FOR RELEASE: Tuesday, August 01, 2000 CIA-RDP86-00513R001344

RASKIN, L. M.

Vegetable Gardening

Great attention to local fertilizers; sad. i og. no. 2, 1952.

9. Monthly List of Russian Accessions, Library of Congress, May 1952, Uncl.

APPROVED FOR RELEASE: Tuesday, August 01, 2000 CIA-RDP86-00513R0013442

"APPROVED FOR RELEASE: Tuesday, August 01, 2000 CIA-RDP86-00513R001344

RASKIN, L. M.

RASKIN, L. M.

Potatoes

Books of innovators ("How we achieved a large potato harvest," I.F. Repin, and "How we obtained a large harvest," V. Makarov. Reviewed by L. M. Raskin). Sad i og. no. 3, 1952.

Monthly List of Russian Accessions, Library of Congress, May 1952, UNCLASSIFIED.

APPROVED FOR RELEASE: Tuesday, August 01, 2000 CIA-RDP86-00513R0013442

"APPROVED FOR RELEASE: Tuesday, August 01, 2000 CIA-RDP86-00513R001344

RASKIN, L. M.

RASKIN, L. M.

Potatoes

Books of innovators ("How we achieved a large potato harvest," I. F. Repin, and "How we Obtained a Large Harvest," V. Makarov.) - Reviewed by L. M. Raskin. Sad i Og., No. 3, 1952.

Monthly List of Russian Accessions, Library of Congress, May 1952. UNCLASSIFIED.

APPROVED FOR RELEASE: Tuesday, August 01, 2000 CIA-RDP86-00513R0013442

"APPROVED FOR RELEASE: Tuesday, August 01, 2000 CIA-RDP86-00513R001344

1. RASKIN, L. M.

2. USSR (600)

4. Fruit Culture

7. Michurin State Fruit Nursery Farm. Sad i ig. no. 11 1953

Monthly List of Russina Accessions, Library of Congress, March, 1953, Unclassfied.

APPROVED FOR RELEASE: Tuesday, August 01, 2000 CIA-RDP86-00513R0013442

"APPROVED FOR RELEASE: Tuesday, August 01, 2000 CIA-RDP86-00513R001344

RASKIN, L.S., inzh.

New design of die-stamped frameless ship doors and hatch covers. Sudostroenie 27 no.9:56-58 S '61. (MIRA 14:11)
(Hulls (Naval architecture))

APPROVED FOR RELEASE: Tuesday, August 01, 2000 CIA-RDP86-00513R0013442

"APPROVED FOR RELEASE: Tuesday, August 01, 2000 CIA-RDP86-00513R001344

L 06127-67 EWT(1)

ACC NR: AP6025886 SOURCE CODE: UR/0292/66/000/005/0037/0042

AUTHOR: Raskin, L. Ya. (Engineer); Sedov, L. N. (Engineer)

ORG: none

TITLE: Analysis of an autonomous inverter stable to external short-circuits

SOURCE: Elektrotekhnika, no. 5, 1966, 37-42

TOPIC TAGS: inverter, power inverter

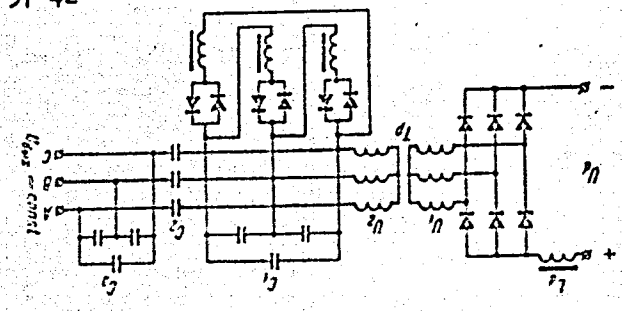

ABSTRACT: Formulas for calculating parameters are deduced, and operation is analyzed of a series-parallel inverter (see figure) which is intended for supplying a network of power consumers; the sustained short-circuit current is specified. The thyristor-type inverter withstands external short-circuits and hence can be protected by automatic-reclosing schemes. The principal parameters of the inverter are determined by two methods, analytical and graphical (by means of a vector diagram). The formulas were verified experimentally on an 8-kw 220-vac, 170--260-vdc inverter; its capacitors were: $C_1 = 10\ \mu F$, $C_2 = 100\ \mu F$, $C_3 = 20\ \mu F$

Card 1/2

UDC: 621.314.58.001.24

APPROVED FOR RELEASE: Tuesday, August 01, 2000 CIA-RDP86-00513R0013442

"APPROVED FOR RELEASE: Tuesday, August 01, 2000 CIA-RDP86-00513R001344

L 06127-67

ACC NR: AP6025886

per phase; the output waveshape was practically sinusoidal. Orig. art. has: 4 figures and 28 formulas.

SUB CODE: 09 / SUBM DATE: none / ORIG REF: 003 / OTH REF: 001

Card 2/2 LC

APPROVED FOR RELEASE: Tuesday, August 01, 2000 CIA-RDP86-00513R0013442

"APPROVED FOR RELEASE: Tuesday, August 01, 2000 CIA-RDP86-00513R001344

ACC NR: AP6025600 SOURCE CODE: UR/0413/66/000/013/0040/0040

INVENTOR: Raskin, L. Ya.

ORG: none

TITLE: A regulated autonomous inverter. Class 21, No. 183269

SOURCE: Izobreteniya, promyshlennyye obraztsy, tovarnyye znaki, no. 13, 1966, 40

TOPIC TAGS: electric device, automatic regulation

ABSTRACT: This Author Certificate presents a regulated autonomous inverter using controlled rectifiers. The inverter consists of two current inverters with their voltage outputs combined geometrically. The design reduces the established power of the equipment. A reactive power regulation device may be made as a circuit with linear choke coils connected in series to antiparallel controlled rectifiers (see Fig. 1). This device is connected to the alternating current outputs of each inverter.

Card 1/2 UDC: 621.314.572

APPROVED FOR RELEASE: Tuesday, August 01, 2000 CIA-RDP86-00513R0013442

"APPROVED FOR RELEASE: Tuesday, August 01, 2000 CIA-RDP86-00513R001344

ACC NR: AP6025600

Fig. 1. 1 and 2 - current inverters; 3 and 4 - reactive power regulation device; 5 - linear choke coils; 6 - antiparallel rectifiers

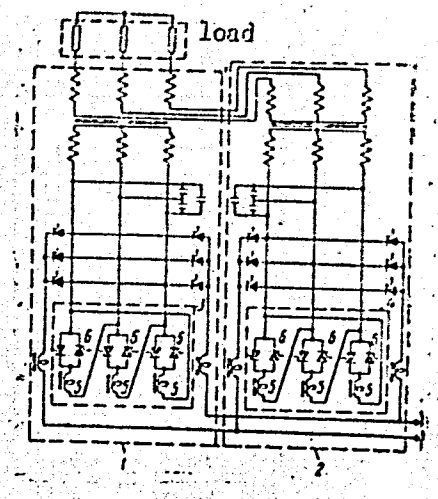

Orig. art. has: 1 figure.

SUB CODE: 09/ SUBM DATE: 22Jul64

Card 2/2

APPROVED FOR RELEASE: Tuesday, August 01, 2000 CIA-RDP86-00513R0013442

"APPROVED FOR RELEASE: Tuesday, August 01, 2000 CIA-RDP86-00513R001344

RASKIN, L.Ya., inzh.

Analysis and method for calculating the circuit of a regulated inverter. Elektrotekhnika 36 no.5:1-6 My '65.

(MIRA 18:5)

APPROVED FOR RELEASE: Tuesday, August 01, 2000 CIA-RDP86-00513R0013442

"APPROVED FOR RELEASE: Tuesday, August 01, 2000 CIA-RDP86-00513R001344

KUTEPOV, A.T.; BASKIN, M.A.; BABITSKAYA, L.S.

Laboratory pore pressure gauge of the Dnepropetrovsk Institute of Railroad Transportation Engineers. Vop. geotekh. no.6:129-134 '63. (MIRA 17:9)

APPROVED FOR RELEASE: Tuesday, August 01, 2000 CIA-RDP86-00513R0013442

"APPROVED FOR RELEASE: Tuesday, August 01, 2000 CIA-RDP86-00513R001344

SOV/16-59-9-44/47

17(2, 6)

AUTHOR: Raskin, M.M.

TITLE: The Epidemiological Significance of Leaving Scarlet Fever Patients in Their Homes

PERIODICAL: Zhurnal mikrobiologii, epidemiologii i immunobiologii, 1959, Nr 9, pp 144-146 (USSR)

ABSTRACT: The author reviews the epidemiological significance of the home treatment of scarlet fever patients. It was found that the spread of the disease to persons in contact with the patients was twice as great as if the patients were hospitalized. The conclusion is that scarlet fever patients may be left at home provided that the epidemiological conditions are suitable and that proper medical attention is at hand.
There are 2 tables and 2 Soviet references.

Card 1/2

APPROVED FOR RELEASE

"APPROVED FOR RELEASE: Tuesday, August 01, 2000 CIA-RDP86-00513R001344

SOV/16-59-9-44/47

The Epidemiological Significance of Leaving Scarlet Fever Patients in Their Homes

ASSOCIATION: Chitinskiy institut epidemiologii, mikrobiologii i gigiyeny (Institute of Epidemiology, Microbiology and Hygiene, Chita)

SUBMITTED: December 12, 1958

Card ~~3/3~~ 2/2

APPROVED FOR RELEASE: Tuesday, August 01, 2000 CIA-RDP86-00513R0013442

"APPROVED FOR RELEASE: Tuesday, August 01, 2000 CIA-RDP86-00513R001344

USSR / Microbiology. Microbes Pathogenic for Man and Animals. Bacteria. Root Bacteria. F-4

Abs Jour: Ref Zhur-Biol., 1958, No 17, 76808.

Author : Raskin, M. M.; Dobrovol'skaya, K. A.
Inst : Not given.
Title : A Study Experiment of the Epidemiology and Prophylaxis of Diphtheria in Chita.

Orig Pub: Zh. mikrobiol., epidemiol., i immunobiol., 1957, No 12, 23-28.

Abstract: No abstract.

Card 1/1

APPROVED FOR RELEASE: Tuesday, August 01, 2000 CIA-RDP86-00513R0013442

"APPROVED FOR RELEASE: Tuesday, August 01, 2000 CIA-RDP86-00513R001344

OSTROVSKIY, Aleksandr Samoylovich; RYAZANTSEV, Georgiy Mikhaylovich; RASKIN, M.M., nauchn. red.; TIKHONOVA, N.V., red.; TOKER, A.M., tekhn. red.

[Conducting laboratory work on mensuration, allowances and fits] Provedenie laboratornykh rabot po tekhnike izmereniia, dopuskam i posadkam. Moskva, Protekhizdat, 1962. 80 p. (MIRA 17:4)

APPROVED FOR RELEASE: Tuesday, August 01, 2000 CIA-RDP86-00513R0013442

"APPROVED FOR RELEASE: Tuesday, August 01, 2000 CIA-RDP86-00513R001344

RASKIN, M. M.

Epidemiological role of scarlet fever convalescents. Zhur. mikrobiol., epid. i immun. 32 no.8:53-58 Ag '61. (MIRA 15:7)

1. Iz Chitinskogo instituta epidemiologii, mikrobiologii i gigiyeny.

(SCARLET FEVER)

APPROVED FOR RELEASE: Tuesday, August 01, 2000 CIA-RDP86-00513R0013442

"APPROVED FOR RELEASE: Tuesday, August 01, 2000 CIA-RDP86-00513R001344

RASKIN, M.M.; ELKONI, L.G.

Data from the study on Schick's reaction in children at pediatric institutions of Chita. Zhur. mikrobiol., epid. i immun. 40 no.9: 139 S'63. (MIRA 17:5)

1. Iz Chitinskogo instituta epidemiologii, mikrobiologii i gigiyeny.

APPROVED FOR RELEASE: Tuesday, August 01, 2000 CIA-RDP86-00513R0013442

"APPROVED FOR RELEASE: Tuesday, August 01, 2000 CIA-RDP86-00513R001344

ESSEI', A.Ye., starshiy nauchnyy sotrudnik, kand.biol.nauk; NOVOKROSHCHENOV, B.V., starshiy nauchnyy sotrudnik, kand.med.nauk, otv.red.; BLIZEYEV, V.I., kand.med.nauk, red.; KOZLOV, V.A., dotsent, red.; RASKIN, M.M., starshiy nauchnyy sotrudnik, kand.med.nauk, red.

[Problems in the biology of the causative agent of diphtheria] Voprosy biologii vozbuditelia difterii. Chita, 1959. 189 p. (Chita. Institut epidemiologii, mikrobiologii i gigieny. Nauchnye zapiski, no.5). (MIRA 15:1)

(CORYNEBACTERIUM DIPHTHERIAE)

APPROVED FOR RELEASE: Tuesday, August 01, 2000 CIA-RDP86-00513R0013442

"APPROVED FOR RELEASE: Tuesday, August 01, 2000 CIA-RDP86-00513R001344

RASKIN, M.M.

Some data on the epidemiology and prevention of measles (as revealed by data from Chita Province). Zhur. mikrobiol. epid. i immun. 32 no.7: 64-65 Je '61. (MIRA 15:5)

1. Iz Chitinskogo instituta epidemiologii, mikrobiologii i gigiyeny.
(CHITA PROVINCE--MEASLES)

APPROVED FOR RELEASE: Tuesday, August 01, 2000 CIA-RDP86-00513R0013442

"APPROVED FOR RELEASE: Tuesday, August 01, 2000 CIA-RDP86-00513R001344

YEGOROV, I.N., dotsent; SIROSH, P.M.; NAUMOV, A.V.; RASKIN, M.M.; NIKIFOROV, N.I., kand.veterin.nauk; TRAKHANOV, D.F., kand.veterin.nauk; PETUKHOVSKIY, A.A.; ENDZIN, A.K.

Sanitation and veterinary hygiene. Veterinariia 41 no.3:73-82 Mr '64. (MIRA 18:1)

1. Krasnoyarskiy sel'skokhozyaystvennyy institut (for Yegorov). 2. Glavnyy veterinarnyy vrach Chernovitskogo oblastnogo upravleniya proizvodstva i zagotovok sel'skokhozyaystvennykh produktov (for Sirosh). 3. Zaveduyushchiy khimicheskim otdelom Chernovitskoy oblastnoy veterinarnoy laboratoriyey (for Raskin). 4. Direktor Chernovitskoy oblastnoy veterinatnoy laboratoriyey (for Naumov). 5. Vsesoyuznyy nauchno-issledovatel'skiy institut veterinarnoy sanitarii (for Nikiforov, Trakhanov). 6. Dezinfektsionnaya stantsiya Moskovskogo gorodskogo otdela zdravookhraneniya (for Petukhovskiy). 7. Vsesoyuznyy nauchno-issledovatel'skiy institut veterinarnoy sanitarii (for Endzin).

APPROVED FOR RELEASE: Tuesday, August 01, 2000 CIA-RDP86-00513R0013442

"APPROVED FOR RELEASE: Tuesday, August 01, 2000 CIA-RDP86-00513R001344

PODLEVSKIY, A.V.; KOGAN, V.Ya.; GORCHAKOVA, Yu.P.; YELIZAROVSKIY, G.I.; RYABOSHAPKA, A.P.; REZNIK, S.R.; GOLUBEV, T.I.; GINTSE, L.A.; RASKIN, M.M.; ZUYENKO, P.G.; KHOMIK, S.R.; KATSNEL'SON, I.A.; ZHILIN, S.I.; LYSENKOV, M.N.; ROMANOV, B.G.; SAVENKOV, D.A.; GIL', L.T.; LEVINA, Ye.S.; VOVKI, A.S.; POSLEDOV, F.F.

Annotations. Zhur.mikrobiol.,epid.i immun. 32 no.12:120-125 D '61. (MIRA 15:11)

1. Iz Leningradskogo instituta usovershenstvovaniya vrachey imeni Kirova (for Podlevskiy). 2. Iz Ukrainskogo nauchno-issledovatel'skogo instituta kommunal'noy gigiyeny (for Kogan). 3. Iz Voronezhskogo meditsinskogo instituta (for Gorchakova). 4. Iz Arkhangel'skogo meditsinskogo instituta (for Yelizarovskiy). 5. Iz Kiyevskogo instituta epidemiologii i mikrobiologii (for Ryaboshapka, Reznik). 6. Iz zavoda meditsinskikh preparatov Leningradskogo myasokombinata imeni S.M.Kirova (for Golubev). 7. Iz Gosudarstvennogo kontrol'nogo instituta meditsinskikh biologicheskikh preparatov imeni Tarasevicha (for Gintse). 8. Iz Chitinskogo instituta epidemiologii, mikrobiologii i gigiyeny (for Raskin). 9. Iz Ternopol'skogo meditsinskogo instituta (for Zuyenko). 10. Iz Rostovskogo instituta epidemiologii, mikrobiologii i gigiyeny (for Khomik). 11. Iz Chelyabinskogo meditsinskogo instituta (for Gil', Levina, Vovki, Posledov).

(IMMUNOLOGY--ABSTRACTS) (EPIDEMIOLOGY--ABSTRACTS)

APPROVED FOR RELEASE: Tuesday, August 01, 2000 CIA-RDP86-00513R0013442

"APPROVED FOR RELEASE: Tuesday, August 01, 2000 CIA-RDP86-00513R001344

RASKIN, M.M.

Influence of some infections on antitoxic immunity against diphtheria. Zhur.mikrobiol., epid.i immun. 33 no.8:132-133 Ag '62. (MIRA 15:10)

1. Iz Chitinskogo instituta epidemiologii, mikrobiologii i gigiyeny.

(CHILDREN--DISEASES) (DIPHTHERIA)

APPROVED FOR RELEASE: Tuesday, August 01, 2000 CIA-RDP86-00513R0013442

"APPROVED FOR RELEASE: Tuesday, August 01, 2000 CIA-RDP86-00513R001344

L 33032-66 EWT(1) RO

ACC NR: AP6024160 SOURCE CODE: UR/0020/65/164/003/0598/0601

AUTHOR: Chudakov, M. I.; Antipova, A. V.; Polyak, A. B.; Raskin, M. N.

ORG: All-Union Scientific Research Institute of the Hydrolysis and Alcoholic Sulfite Industry (Vsesoyuznyy nauchno-issledovatel'skiy institut gidroliznoy i sul'fitno-spirtovoy promyshlennosti)

TITLE: Obtaining quinonic nitropolycarboxylic acids -- plant growth stimulants from hydrolytic lignin

SOURCE: AN SSSR. Doklady, v. 164, no. 3, 1965, 598-601

TOPIC TAGS: hydrolysis, plant growth, organic nitro compound, molecular weight, quinone, chemical reactor, polysaccharide, solvent extraction, chemical precipitation, polycarboxylic acid, biochemistry, oxidation

ABSTRACT: The authors have developed and applied a method of fractional, gradual oxidation and hydrolysis of condensed lignin with nitric acid in an aqueous medium at 100°. The gradual introduction of the oxidant in the reaction mixture leads to a minimum breakdown in the quinonic acids formed and permits the process to be carried out for a small consumption of oxidant. As the object of the investigation, different kinds of technical lignins subjected to prolonged condensation treatment were used. Lignin (lignin content, according to Koenig, was 85 - 90%, OCH_3 -- 4.7 - 5%) in the amount of 500 grams in 5 liters of water -- was placed into a stainless steel reactor fitted with cooling coils, a reflux condenser, a mixer, and an electric heating attachment. The suspension of lignin in water was heated to 100°. After the mixer had stirred the mixture gradually

Card 1/2

0915 1718

APPROVED FOR RELEASE: Tuesday, August 01, 2000 CIA-RDP86-00513R0013442

"APPROVED FOR RELEASE: Tuesday, August 01, 2000 CIA-RDP86-00513R001344

L 33032-66

ACC NR: AP6024160

for six hours, nitric acid (1.35) was added in the amount of 0.75 kg (based on the calculation for the monohydrate), with a gradual supply of heated air into the lower part of the reactor. The reaction proceeded vigorously with the evolution of gaseous products and in some cases required cooling. At the completion of the reaction, the solution containing only traces of nitric acid was filtered free of the insoluble residue and was neutralized with calcium carbonate to pH 2.8 - 3. In order to isolate the quinonic acids, the solution was further extracted with methylethylketone. The extract was dried with sodium sulfate. After separation of a larger part of the solvent in vacuum, a thick syrup was poured into dry petroleum ether. The precipitating dark-red oil was separated from the other, dried in a vacuum drier at 40° and in a vacuum dessicator over alkali, and then over phosphoric anhydride for a period of a week. The yield was up to 30% of the lignin weight used. The resulting brick-red, very hygroscopic powder dissolved readily in water and in polar organic solvents.

In investigating its properties, the fraction dissolved when heated in dioxane was used. The product was titrated potentiometrically in an aqueous solution as a strong acid. Its molecular weight (cryoscopically determined) in dioxane was 286. The gram-equivalent was 132. The content of carboxylic groups in the molecule is approximately two. Elemental composition (in %) was as follows: C -- 45.1, H -- 3.74, O -- 45.84, and N -- 5.32.

Upon comparison of experimental and calculated data (elemental composition, molecular weight, gram-equivalent, and infrared spectra), it is assumed that the products obtained by the authors can be classed as quinonic nitropolycarboxylic acids. This paper was presented by Academician A. L. Kursanov on 23 November 1964. Orig. art. has: 2 figures. [JPRS]

SUB CODE: 07, 06 / SUBM DATE: 19Nov64 / ORIG REF: 006 / OTH REF: 006

Card 2/2

APPROVED FOR RELEASE: Tuesday, August 01, 2000 CIA-RDP86-00513R0013442

"APPROVED FOR RELEASE: Tuesday, August 01, 2000 CIA-RDP86-00513R001344

RASKIN, M.M.; DOBROVOL'SKAYA, K.A.

Studies on epidemiology and prevention of diphtheria in Chita.
Zhur.mikrobiol.epid. i immun.28 no.12:23-28 D '57. (MIRA 11:4)

1. Iz Chitinskogo instituta epidemiologii, mikrobiologii i gigiyeny i Chitinskoy gorodskoy sanitarno-epidemiologicheskoy stantsii.
(DIPHTHERIA,
epidemiol. & prev. in Russia (Rus)

APPROVED FOR RELEASE: Tuesday, August 01, 2000 CIA-RDP86-00513R0013442

"APPROVED FOR RELEASE: Tuesday, August 01, 2000 CIA-RDP86-00513R001344

KUZNETS, M. M.; RASKIN, M. S.

Skin manifestations in vitamin A deficiency. Vest. vener., Moskva no.5:47-49 Sept-Oct 1951. (CIML 21:1)

1. Prof. Kuznets; Raskin, Captain, Medical Corps. 2. Of the Department of Skin and Venereal Diseases (Head — Prof. M. M. Kuznets), Bashkir Medical Institute (Director — Docent A. A. Ivanov).

APPROVED FOR RELEASE: Tuesday, August 01, 2000 CIA-RDP86-00513R0013442

"APPROVED FOR RELEASE: Tuesday, August 01, 2000 CIA-RDP86-00513R001344

RASKIN, M.M.; GAMLESHKO, Kh.P.; LOPATINA, V.V.; DOBROVOL'SKAYA, K.A.; SHCHERBAKOVA, Ye.M.

Incidence of diphtheria in children's institutions in Chita and its determining factors. Zhur. mikrobiol. epid. i immun. 31 no. 5:120 My '60. (MIRA 13:10)

1. Iz Chitinskogo instituta epidemiologii, mikrobiologii i gigiyeny.

(CHITA—DIPHTHERIA)

APPROVED FOR RELEASE: Tuesday, August 01, 2000 CIA-RDP86-00513R0013442

"APPROVED FOR RELEASE: Tuesday, August 01, 2000 CIA-RDP86-00513R001344

CHUDAKOV, M.I.; ANTIPOVA, A.V.; POLYAK, A.B.; RASKIN, M.N.

Use of hydrolytic lignin for the production of quinonic nitro-polycarboxylic acids as growth promoting substances. Dokl. AN SSSR 164 no.3:598-601 S '65. (MIRA 18:9)

1. Vsesoyuznyy nauchno-issledovatel'skiy institut gidroliznoy i sul'fitno-spirtovoy promyshlennosti. Submitted November 23, 1964.

APPROVED FOR RELEASE: Tuesday, August 01, 2000 CIA-RDP86-00513R0013442

"APPROVED FOR RELEASE: Tuesday, August 01, 2000 CIA-RDP86-00513R001344

AVERICHEV, Yevgeniy Petrovich; AKSINEVICH, Vladimir Iosifovich; RASKIN, Mikhail Nikolayevich; KUZNETSOVA, L.G., red.

[Reconditioning plunger pairs; practice of the Zaraysk Machinery Plant] Vosstanovlenie plunzhernykh par; iz opyta raboty Zaraiskogo mekhanicheskogo zavoda. Moskva, Biuro tekhn. informatsii, 1964. 31 p. (MIRA 18:5)

APPROVED FOR RELEASE: Tuesday, August 01, 2000 CIA-RDP86-00513R0013442

"APPROVED FOR RELEASE: Tuesday, August 01, 2000 CIA-RDP86-00513R001344

BUTLEROV, Aleksandr Mikhaylovich [deceased]; POGODIN, S.A., otv. red.; BYKOV,G.V., red.; PLATE, A.F., red.; RASKIN,N.M., red.; POLYAKOVA,T.V., tekhn.red.

[Scientific and educational activities; collection of documents] Nauchnaia i pedagogicheskaia deiatel'nost'; sbornik documentov. Moskva, Izd-vo Akad nauk SSSR, 1961. 416 p. (MIRA 14:5)

(Butlerov, Aleksandr Mikhailovich, 1828-1886)

APPROVED FOR RELEASE: Tuesday, August 01, 2000 CIA-RDP86-00513R0013442

"APPROVED FOR RELEASE: Tuesday, August 01, 2000 CIA-RDP86-00513R001344

RASKIN, N.M., kand.istoricheskikh nauk (Leningrad)

New data on the first glass works in Tal'tsinsk (Siberia) founded by Academician E.G.Laksman. Sbor. nauch. trud. Bel. politekh. inst. no.86:131-137 '60. (MIRA 13:10)
(Tal'tsinsk--Glass manufacture)
(Laksman, Erik Gustavovich, 1737-1796)

APPROVED FOR RELEASE: Tuesday, August 01, 2000 CIA-RDP86-00513R0013442

"APPROVED FOR RELEASE: Tuesday, August 01, 2000 CIA-RDP86-00513R001344

BUTLEROV, Aleksandr Mikhaylovich [1828-1886]; ANGERT, G.A. [translator]; MOMMA, M. [translator]; SOKOLOVSKIY, A.A. [translator]; VASIL'YEVA, Z.N. [translator]; ALEKSANDROV, L. [translator]; KLADO, T.N. [translator]; PLATE, A.F. [translator], red.; POGODIN, S.A., otv.red.; BYKOV, G.V., red.; RASKIN, N.M., red.; POLYAKOVA, T.V., tekhn.red.

[A.M.Butlerov; his scientific and pedagogical endeavors. A collection of documents] A.M.Butlerov; nauchnaia i pedagogicheskaia deiatel'-nost'. Sbornik dokumentov. Moskva, 1961. 416 p. (MIRA 14:3)

1. Akademiya nauk SSSR.
(Butlerov, Aleksandr Mikhailovich, 1828-1886)

APPROVED FOR RELEASE: Tuesday, August 01, 2000 CIA-RDP86-00513R0013442

"APPROVED FOR RELEASE: Tuesday, August 01, 2000 CIA-RDP86-00513R001344

RASKIN, Naum Mikhaylovich; SHAFRANOVSKIY, I.I., doktor geol.-min. nauk, otv. red.; ARON, G.M., red. izd-va; ZAMARAYEVA, R.A., tekhn. red.

[M.V.Lomonosov's chemistry laboratory; chemistry in the St.Petersburg Academy of Sciences in the second half of the 18th century] Khimicheskaia laboratoriia M.V.Lomonosova; khimiia v Peterburgskoi Akademii nauk vo 2-i polovine XVIII v. Moskva, Izd-vo Akad. nauk SSSR, 1962. 339 p.
(MIRA 15:4)

(Leningrad--Chemical laboratories)

APPROVED FOR RELEASE: Tuesday, August 01, 2000 CIA-RDP86-00513R0013442

"APPROVED FOR RELEASE: Tuesday, August 01, 2000 CIA-RDP86-00513R001344

KOPELEVICH, Yu.Kh.; KRUTIKOVA, M.V.; MIKHAYLOV, G.K.; RASKIN, N.M.; KNYAZEV, G.A., red.; SMIRNOV, V.I.; YUSHKEVICH, A.P.; TRAVIN, N.V., red.izd-va; BOCHEVER, V.T., tekhn.red.

[Manuscripts of L.Euler's works in the archives of the Academy of Sciences of the U.S.S.R.] Rukopisnye materialy L.Eilera v arkhive Akademii nauk SSSR. Moskva, Izd-vo Akad. nauk SSSR. Vol.1. [Scientific description] Nauchnoe opisanie. 1962. 427 p. (Akademiia nauk SSSR. Arkhiv. Trudy, no.17). (MIRA 15:4)

(Euler, Leonhard, 1707-1783)

APPROVED FOR RELEASE: Tuesday, August 01, 2000 CIA-RDP86-00513R0013442

"APPROVED FOR RELEASE: Tuesday, August 01, 2000 CIA-RDP86-00513R001344

RASKIN, Naum Mikhaylovich; GRIGOR'YAN, A.T., otv. red.; ARON, G.M., red. izd-va; ZAMARAYEVA, R.A., tekhn. red.

Ivan Petrovich Kulibin, 1735-1818. Moskva, Izd-vo Akad. nauk SSSR, 1962. 205 p. (MIRA 16:1)
(Kulibin, Ivan Petrovich, 1735-1818)

APPROVED FOR RELEASE: Tuesday, August 01, 2000 CIA-RDP86-00513R0013442

"APPROVED FOR RELEASE: Tuesday, August 01, 2000 CIA-RDP86-00513R001344

RASKIN, N.M.

PHASE I BOOK EXPLOITATION SOV/4578

Minsk. Belorusskiy politekhnicheskiy institut

Khimiya, tekhnologiya i istoriya stekla i keramiki (The Chemistry, Technology, and History of Glass and Ceramics) Minsk, Red.-izd. otdel BPI imeni I. V. Stalina, 1960. 138 p. (Series: Its: Sbornik nauchnykh trudov, vyp. 86) 1,200 copies printed.

Sponsoring Agencies: Ministerstvo vysshego, srednego spetsial'nogo i professional'nogo obrazovaniya BSSR; Belorusskiy politekhnicheskiy institut imeni I. V. Stalina.

Editorial Board: N. N. Yermolenko, Candidate of Technical Sciences, I. S. Kachan, and L. K. Petrov; Ed.: N. V. Kapranova; Tech. Ed.: S. A. Posina.

PURPOSE: This book is intended for chemists and physicists interested in the composition, structure, and properties of glass and ceramics.

~~Card 1/6~~

The Chemistry, Technology, and History (Cont.) SOV/4578

COVERAGE: The articles contained in this collection deal with methods of studying the properties of various glass and ceramic compositions and the technology of glass and ceramics manufacture. The last two articles treat the history of silicate chemistry. No personalities are mentioned. References follow the articles.

TABLE OF CONTENTS:

THE PHYSICAL CHEMISTRY OF SILICATES

Zhmaina, L. A. [Candidate of Technical Sciences (Minsk)]. Physicochemical Processes in Glass Formation 3

Shamilin, A. N. [Candidate of Technical Sciences (Deceased), (Minsk)]. Study of the Interaction of Sodium Chloride With the Oxide and Hydrate of Ferric Oxide During Heating 12

Sharay, V. N. [Candidate of Technical Sciences], and V. V. Yeitovich [Minsk]. The Mineralogical Composition of Refractory Clays From the "Gorodok" Site 16

The Chemistry, Technology, and History (Cont.) SOV/4578

THE HISTORY OF SILICATE CHEMISTRY AND TECHNOLOGY

Chernykh, V. I. [Leningrad]. Russian Flint Glass in Western Europe During the Second Half of the Eighteenth Century 124

Raskin, N. M. [Candidate of Historical Sciences (Leningrad)]. New Information on the First Glass Plant in Tal'tsinsk (Siberia), Founded by Academician E. G. Laksman 131

AVAILABLE: Library of Congress

Card 6/6

JA/mm/ifa
8/2/61

APPROVED FOR RELEASE: Tuesday, August 01, 2000 CIA-RDP86-00513R0013442

"APPROVED FOR RELEASE: Tuesday, August 01, 2000 CIA-RDP86-00513R001344

RASKIN, N.M.; SHAFRANOVSKIY, I.I.

E.S. Fedorov, V.I. Vernadskii; based on materials of the archives of the Academy of Sciences of the U.S.S.R. Uch. po ist. geol. znan. no.8:165-176 '59. (MIRA 13:3)
(Fedorov, Evgraf Stepanovich, 1853-1919)
(Vernadskii, Vladimir Ivanovivh, 1863-1945)

APPROVED FOR RELEASE: Tuesday, August 01, 2000 CIA-RDP86-00513R0013442

"APPROVED FOR RELEASE: Tuesday, August 01, 2000 CIA-RDP86-00513R001344

RASKIN, N.M.; BEZBORODOV, M.A., red.; KNYAZEV, G.A., red.; FIGUROVSKIY, N.A., red.; ZAYCHIK, N.K., red. izd-va; ARONS, R.A., tekhn. red.

[Manuscripts of chemists of the second half of the 18th century in the Archives of the Academy of Sciences of the U.S.S.R.] Rukopisnye materialy khimikov vtoroi poloviny XVIII v. v Arkhive Akademii Nauk SSSR. Nauchnoe opisanie. Moskva, Izd-vo Akademii Nauk SSSR, 1957. 212 p. (MIRA 11:1)

(Leningrad--Manuscripts) (Bibliography--Chemistry)

APPROVED FOR RELEASE: Tuesday, August 01, 2000 CIA-RDP86-00513R0013442

"APPROVED FOR RELEASE: Tuesday, August 01, 2000 CIA-RDP86-00513R001344

RASKIN, N.M.

SHAFRANOVSKIY, I.I.; RASKIN, N.M. (Leningrad)

René-Just Haüy and his scientific connections with Russian scientists. Vop.ist.est. i tekh. no.5:165-168 '57. (MIRA 11:2)
(Haüy, René-Just, 1743-1822)

APPROVED FOR RELEASE: Tuesday, August 01, 2000 CIA-RDP86-00513R0013442

"APPROVED FOR RELEASE: Tuesday, August 01, 2000 CIA-RDP86-00513R001344

Raskin, N. M.

SHAFRANOVSKIY, I.I.; RASKIN, N.M.; KNYAZEV, G.A., redaktor; NIKOLAYEV, V.A., redaktor; IMSHENETSKIY, Yu.K., redaktor izdatel'stva; BLEYKH, E.Yu., tekhnicheskiy redaktor.

[Manuscript materials of E.S. Fedorov in the archives of the Academy of Sciences of the U.S.S.R.; critical description, texts] Rukopisnye materialy E.S.Fedorova v arkhive Akademii nauk SSSR; nauchnoe opisanie, teksty. Moskva, Izd-vo Akad. nauk, SSSR 1957. 211 p. (Akademiia nauk SSSR. Arkhiv. Trudy, no,14) (MLRA 10:5)

(Fedorov, Evgraf Stepanovich, 1853-1919)
(Crystals)

APPROVED FOR RELEASE: Tuesday, August 01, 2000 CIA-RDP86-00513R0013442

"APPROVED FOR RELEASE: Tuesday, August 01, 2000 CIA-RDP86-00513R001344

RASKIN, N.M. (Leningrad).

L. Euler and the investigation conducted by the St. Petersburg Academy of Sciences concerning plans for a permanent bridge across the Neva river. Izv. AN SSSR, Otd. tekh. nauk no.3:38-45 Mr '57. (Euler, Leonhard, 1707-1783) (MLRA 10:6)
(Bridges, Wooden--Models)

APPROVED FOR RELEASE: Tuesday, August 01, 2000 CIA-RDP86-00513R0013442

"APPROVED FOR RELEASE: Tuesday, August 01, 2000 CIA-RDP86-00513R001344

KORYAKOV, P.N.; MAL'KEVICH, B.A.; RASKIN, N.M.

The manuscript inheritance of Academician S.I. Vavilov. Trudy Inst.ist.est.i tekh. 17:154-155 '57. (MIRA 10:7)
(Vavilov, Sergei Ivanovich, 1891-1951)

APPROVED FOR RELEASE: Tuesday, August 01, 2000 CIA-RDP86-00513R0013442

"APPROVED FOR RELEASE: Tuesday, August 01, 2000 CIA-RDP86-00513R001344

RASKIN, N. M., and SHAFRANOVSKIY, I. I.

"The Forgotten Russian Mineralogist, Fedor Petrovick Moiseyenko (1754-1781)," Mineralog. sb. L'vovsk. geol. o-va, No 7, 333-343, 1953

The authors report brief biographical information on a scientist of the 18th Century, F. P. Moiseyenko, one of the first Russian mineralogists. They give a survey and evaluation of his scientific works.

RZhGeol, No 1

APPROVED FOR RELEASE

"APPROVED FOR RELEASE: Tuesday, August 01, 2000 CIA-RDP86-00513R001344

RASKIN, N.M.

LUK'YANOV, P.M.; RASKIN, N.M.

M.V.Lomonosov's works in the field of dyestuffs. Trudy po ist. tekh. no.10:23-28 '54. (MLRA 8:3)

(Lomonosov, Mikhail Vasil'evich, 1711-1765)
(Dyes and dyeing --History)

APPROVED FOR RELEASE: Tuesday, August 01, 2000 CIA-RDP86-00513R0013442

"APPROVED FOR RELEASE: Tuesday, August 01, 2000 CIA-RDP86-00513R001344

RASKIN N.M

DORMIDONTOV, N.K.; RASKIN, N.M.

I.P.Kulibin's work in the field of river transportation. Trudy po ist.tekh. no.11:17-29 '54. (MLRA 7:9)
(Inland navigation) (Kulibin, I.P.)

APPROVED FOR RELEASE: Tuesday, August 01, 2000 CIA-RDP86-00513R0013442

"APPROVED FOR RELEASE: Tuesday, August 01, 2000 CIA-RDP86-00513R001344

RASKIN, N. M.

USSR/ Scientific Organization - Journals

Card 1/1 : Pub. 124 - 29/35

Authors : Knyazev, G. A., and Raskin, N. M. Candidates of Histor. Sc.

Title : From the past of the Academy of Sciences USSR

Periodical : Vest. AN SSSR 7, 103-105, July 1954

Abstract : Editorial on the occasion of the 150-th anniversary of publication of the Technological Journal of the Acad. of Sc. USSR, the first Russian language journal on applied sciences.

Institution : ....

Submitted : ....

APPROVED FOR RELEASE: Tuesday, August 01, 2000 CIA-RDP86-00513R0013442

"APPROVED FOR RELEASE: Tuesday, August 01, 2000 CIA-RDP86-00513R001344

RASKIN, N. M.

KNYAZEV, G.A., kandidat istoricheskikh nauk; RASKIN, N.M., kandidat istoricheskikh nauk.

First Russian journal of applied sciences; 150th anniversary of the publication of "The Journal of Technology" of the Academy of Sciences. Vest. AN SSSR 24 no.27:103-105 Jl '54. (MLRA 7:8)
(Science--Periodicals--History)

APPROVED FOR RELEASE: Tuesday, August 01, 2000 CIA-RDP86-00513R0013442

"APPROVED FOR RELEASE: Tuesday, August 01, 2000 CIA-RDP86-00513R001344

BASPIN, N. H.

12 to 15 May 1948, Moscow, first conference was held on History of Soviet Chemistry, convened by Commission on the History of Chemistry, Acad Sci USSR. Many papers were presented by (ostensibly) members of this Commission.

"Inventory of M.V. Lomonosov's Chemical Laboratory- Based on documents in the Academy Archives" (Archives, Academy of Sciences USSR)

"Materials on the History of Soviet Chemical Science," published by Acad Sci USSR in Moscow-Leningrad 1950. #283498

APPROVED FOR RELEASE: Tuesday, August 01, 2000 CIA-RDP86-00513R0013442

"APPROVED FOR RELEASE: Tuesday, August 01, 2000 CIA-RDP86-00513R001344

PROCESSES AND PROPERTIES INDEX

First scientific chemical research laboratory in U.S.S.R. V. P. Barnakovskii and N. M. Raskin.—Zavodskaya Lab. 15, 625-6(1949).—Review and history of foundation of Lomonosov's lab. on the occasion of the 200th anniversary. G. M. Kosolapoff

ASM-SLA METALLURGICAL LITERATURE CLASSIFICATION

APPROVED FOR RELEASE: Tuesday, August 01, 2000 CIA-RDP86-00513R0013442

"APPROVED FOR RELEASE: Tuesday, August 01, 2000 CIA-RDP86-00513R001344

VINOGRADOV, Yu.A.; RASKIN, N.M.

Engineer and historian of technology Dmitrii Ivanovich Kargin (1880-1949). Trudy Inst.ist.est. i tekh. 45:214-221 '62. (MIRA 15:8)

(Kargin, Dmitrii Ivanovich, 1880-1949)

APPROVED FOR RELEASE: Tuesday, August 01, 2000 CIA-RDP86-00513R0013442

"APPROVED FOR RELEASE: Tuesday, August 01, 2000 CIA-RDP86-00513R001344

RASKIN, N.M., kandidat istoricheskikh nauk.

R.J. Boskovic, honorary member of the Petersburg Academy of Sciences. Vest. AN SSSR 27 no.1:92-93 Ja '57. (MLRA 10:4)
(Boskovic, Rudjer Josip, 1711-1787)

APPROVED FOR RELEASE: Tuesday, August 01, 2000 CIA-RDP86-00513R0013442

"APPROVED FOR RELEASE: Tuesday, August 01, 2000 CIA-RDP86-00513R001344

R [illegible], N. M.

AUTHOR RASKIN, N.M., (Leningrad), PA - 3071

TITLE Euler L. and the Test of the Projects (in the St. Petersburg Academy of Sciences) for a Permanent Bridge over the Neva River. (Eyler L. i rassmotreniye proyektov postoyannogo mosta cherez r. Nevu v Peterburgskoy Akademii Nauk - Russian)

PERIODICAL Izvestiia Akad. Nauk SSSR, Otdel. Tekhn., 1957, Vol 21, Nr 3, pp 38-48, (U.S.S.R.)

Received 6/1957 Reviewed 7/1957

ABSTRACT Since, till now, the role of Euler and his students in regard to this work has not yet been sufficiently illuminated, a detailed describtion is given using extended evidence. When Euler came into contact with tests of permanent bridge models, he saw a way of working out a method for the reverification of experimental results on the models for the correct bridge. This he set down in his work "Regula facilis pro dijudicanda fitmitate pontis aliusve corporis similis ex cognita firmitate moduli" A summary of this appeared in 1776 in a Russian language calender. Here the test or examinations of various models of Joseph de Ribas, I.P. Kulibin, and Nordstern for a bridge over the Neva River is described by the Academy of Sciences or the above mentioned commission under the chairmanship of Euler. Nordstern's model provided for a pontoon bridge with a swinging center part, while the other two architects projected a single arch wooden bridge for a river width of 32o m. The tests took place at the end of 1776 and the beginning of 1778.

Card 1/2

APPROVED FOR RELEASE: Tuesday, August 01, 2000 CIA-RDP86-00513R0013442

"APPROVED FOR RELEASE: Tuesday, August 01, 2000 CIA-RDP86-00513R001344

Raskin, N. M.

USSR/ Miscellaneous

Card 1/1 Pub. 124 - 14/28

Authors : Raskin, N. M., Cand. of Hist. Sc., and Shafranovskiy, I. I., Dr. of Geol. Miner. Sc.

Title : Manuscript legacy of Ye. S. Fedorov

Periodical : Vest. AN SSSR 26/1, 71-77, Jan 1956

Abstract : Announcement is made by the archive bureau of the Academy of Sciences on the collection of manuscripts of the famous Russian crystallographer, petrographer mineralogist and geometrist Yevgraf Stepanovich Fedorov (1853-1919). Sixteen references: 15 USSR and 1 Germ. (1914-1955).

Institution : .....

Submitted : .....

APPROVED FOR RELEASE: Tuesday, August 01, 2000 CIA-RDP86-00513R0013442

"APPROVED FOR RELEASE: Tuesday, August 01, 2000 CIA-RDP86-00513R001344

RASKIN N.M.

SHAFRANOVSKIY, I.I., sostavitel'; RASKIN, N.M., sostavitel'; KNYAZEV, G.A., redaktor; LAZARENKO, Ye.K., redaktor; ESHMAN, Yu.A., redaktor izdatel'stva; PEVZNER, R.S., tekhnicheskiy redaktor

F.P.Moiseenko's works in the archives of the Academy of Sciences of the U.S.S.R.; description of scientific works, personal and official documents, texts of mineralogical works. Trudy Arkhiva AN SSSR no.12: 3-103 '55. (MLRA 8:11)

(Moiseenko, Fedor Petrovich, 1754-1781)

APPROVED FOR RELEASE: Tuesday, August 01, 2000 CIA-RDP86-00513R0013442

"APPROVED FOR RELEASE: Tuesday, August 01, 2000 CIA-RDP86-00513R001344

RASKIN, M. M.

"The 200th Anniversary of M. V. Lomonosov's Chemical Laboratory," Nauka I Zhizn., No. 1, 1949. Can. Hist. Sci.

APPROVED FOR RELEASE: Tuesday, August 01, 2000 CIA-RDP86-00513R0013442

"APPROVED FOR RELEASE: Tuesday, August 01, 2000 CIA-RDP86-00513R001344

RASKIN, N. M.

"Review of M. A. Bezborodov's Book, 'M. B. Lomonosov and his Work on the Chemistry and Technology of Silicates,'" Vest. Ak. Nauk SSSR, No. 5, 1949.

APPROVED FOR RELEASE: Tuesday, August 01, 2000 CIA-RDP86-00513R0013442

"APPROVED FOR RELEASE: Tuesday, August 01, 2000 CIA-RDP86-00513R001344

SHAGAROV, D.G.; KRASNYUK, V.P.; RASKIN, O.M.

Electric heating of the shutoff fittings and drain of batch-type bitumen stills. Energ.biul. no.5:30-32 My '56. (MLRA 9:8)
(Distillation apparatus)
(Electric heating)

APPROVED FOR RELEASE: Tuesday, August 01, 2000 CIA-RDP86-00513R0013442

"APPROVED FOR RELEASE: Tuesday, August 01, 2000 CIA-RDP86-00513R001344

RASKIN, P. M. petroleum engineer.

Experience of the Kaganovichneft trust in the chemical treatment of clay solutions

1. Oil well drilling.
2. Kaganovichneft' trust.

TN871.2.R3

APPROVED FOR RELEASE: Tuesday, August 01, 2000 CIA-RDP86-00513R0013442

"APPROVED FOR RELEASE: Tuesday, August 01, 2000 CIA-RDP86-00513R001344

RASKIN, P M

AID P - 344

Subject : USSR/Engineering

Card : 1/1

Author : Raskin, P. M.

Title : Influence of viscosity on the characteristics of centrifugal pumps

Periodical : Neft. Khoz., v. 32, #5, 74-81, My 1954

Abstract : The author discusses various methods of characterization of the performance of centrifugal pumps as developed by Sukhanov, Ippen and others with non-dimensional parameters (R_e), (R_H) and (R_s). The author introduces a new non-dimensional parameter R_e = (external radius of wheel) x (width of pump outlet): (viscosity). This parameter has definite relationship to the "relative coefficient" $K' = \frac{Q \text{ water}}{Q \text{ liquid}}$ or to the coefficient $K = \sqrt{\frac{H_W}{H_L}}$ and it is consistent for the different pumps investigated. 3 tables, 10 charts, 2 Russian references (1951-52).

Institution : None

Submitted : No date

APPROVED FOR RELEASE: Tuesday, August 01, 2000 CIA-RDP86-00513R0013442

"APPROVED FOR RELEASE: Tuesday, August 01, 2000 CIA-RDP86-00513R001344

RASKIN, R. M., Eng. Cand. Tech. Sci.

Dissertation: "Investigation of the Effect of Viscosity on the Characteristics of a Sunk Centrifugal Pump." Moscow Order of the Labor Red Banner Petroleum Inst imeni Academician I. M. Gubkin, 25 Feb 47.

SO: Vechernyaya Moskva, Feb, 1947 (Project #17836)

APPROVED FOR RELEASE: Tuesday, August 01, 2000 CIA-RDP86-00513R0013442

"APPROVED FOR RELEASE: Tuesday, August 01, 2000 CIA-RDP86-00513R001344

RASKIN, R.M.

/

Viscosity effects on the performance of centrifugal pumps. R. M. Raskin. *Neftyanoe Khoz.* 32, No. 5, 74-81(1954).—Curves of functional relationship obtained by R. with 5 different pumps, by Ippen (*C.A.* 41, 1207) and at the National Petroleum Expt. Lab. are in good agreement, which permits the application of these curves in centrifugal pump design. A sample of calcns. is given. W. M. Sternberg

APPROVED FOR RELEASE: Tuesday, August 01, 2000 CIA-RDP86-00513R0013442

"APPROVED FOR RELEASE: Tuesday, August 01, 2000 CIA-RDP86-00513R001344

RASKIN, R.M.

AID P - 3281

Subject : USSR/Mining

Card 1/1 Pub. 78 - 11/24

Authors : Raskin, R. M. and R. A. Bagramov

Title : Strength analysis of a sucker rod column

Periodical : Neft. khoz., v. 33, #9, 50-55, S 1955

Abstract : In the State Institute for the Planning of Petroleum Machinery (Gipronaft'mash) tests have been performed to investigate the cyclic stresses in sucker rod columns. Results did not agree with figures computed from a theoretical formula presented by I. A. Oding, Corr. Memb., Ac. of Sci., USSR. An empiric formula based on those tests is suggested. Charts, 5 references, 1944-1951.

Institution : None

Submitted : No date

APPROVED FOR RELEASE: Tuesday, August 01, 2000 CIA-RDP86-00513R0013442

"APPROVED FOR RELEASE: Tuesday, August 01, 2000 CIA-RDP86-00513R001344

RASKIN, R.M.

AUTHOR: Raskin, R.M. and Bagramov, R.A., Candidates of Technical Sciences. 122-1-7/34

TITLE: The effect of asymmetric loads on the corrosion fatigue strength of pump piston rods (Vliyaniye asimmetrichnogo nagruzheniya na korrozionno-ustalostnuyu prochnost' nasosnykh shtang)

PERIODICAL: "Vestnik Mashinostroyeniya" (Engineering Journal), 1957, No.1, pp.28-30 (U.S.S.R.)

ABSTRACT: The links of built-up piston rods operating deep well piston pumps are loaded in tension and compression by a load cycle with variable degrees of cycle assymetry. The need to save weight in pumping from depths reaching 2 500 m has urged full scale fatigue tests on individual links. A carbon steel (0.38% C, 0.15% Mn, 0.3% Si, 0.37% P and 0.37% S) of 60 kg/mm^2 tensile strength in a corrosive medium consisting of simulated sub-soil water (including 192.8 kg/m^3 NaCl) was tested in a special push-pull fatigue machine over a life of 10 000 000 cycles. The factor by which the corrosion fatigue strength is lower than the atmospheric fatigue strength drops from 3.5 in a symmetrical cycle to 1 at a constant tension load. The factor drops linearly when plotted against the ratio of the minimum and maximum stresses of the cycle. There are 5 figures, including 2 graphs, 1 table and 3 Slavic refs.

Card 1/1

AVAILABLE: Library of Congress

APPROVED FOR RELEASE: Tuesday, August 01, 2000 CIA-RDP86-00513R0013442

"APPROVED FOR RELEASE: Tuesday, August 01, 2000 CIA-RDP86-00513R001344

RASKIN, R.M.; BAGRAMOV, R.A.

Surface hardening is an efficient means of strengthening sucker rods. Neft. khoz. 39 no.9:46-49 S '61. (MIRA 15:1)
(Sucker rods)

APPROVED FOR RELEASE: Tuesday, August 01, 2000 CIA-RDP86-00513R0013442

"APPROVED FOR RELEASE: Tuesday, August 01, 2000 CIA-RDP86-00513R001344

PHASE I BOOK EXPLOITATION SOV/4375

Akademiya nauk SSSR. Institut metallurgii imeni A.A. Baykova

Ustalost' metallov; materialy soveshchaniya po ustalosti metallov 22-24 sentyabrya 1958 g. (Fatigue of Metals; Materials of the Conference on Fatigue of Metals, September 22-24, 1958) Moscow, 1960. 157 p. 3,500 copies printed.

Resp. Ed.: I.A. Oding, Corresponding Member, Academy of Sciences USSR; Ed. of Publishing House: A.N. Chernov; Tech. Ed.: I.N. Dorokhina.

PURPOSE: This collection of articles is intended for mechanical engineers, metallurgists, and scientific research workers.

COVERAGE: The collection contains discussions relating to fatigue failure of metals, fatigue in finished parts, and methods for testing endurance. Included are a critical review of existing theories on metal fatigue, some data on physical regularity patterns, and features of steel failure caused by fatigue. Possibilities for applying a new criterion to the notch sensitivity of metals and high-strength steels are investigated. The mechanism of failure due to corrosion fatigue of metals is discussed along with pertinent experimental data. Also presented are the results of testing the fatigue strength of such metal parts as large-size plates and various parts of machines used in the petroleum industry. Problems involved in testing metals for fatigue are examined. No personalities are mentioned. Each article is accompanied by bibliographic references, most of which are Soviet.

Shevandin, Ye. M. (deceased), R. Ye. Reshetnikova, L.M. Rubinshteyn, and L.P. Khudoshnikova, Some Data on Physical Regularity Patterns of Steel Fatigue Failure 27

Raiser, S.I. Endurance Under Repeated Loading and Resistance to Brittle Failure 34

Oding, I.A., and S. Ye. Gurevich. Criteria of Notch Sensitivity of the Metal Under Cyclic Loading 47

Markovets, M.P. Notch Sensitivity of High-Strength Steels 62

Belyayev, S. Ya. Notch Sensitivity of High-Strength Steels 72

Vodenkin, N.G., and V.S. Sinyavskiy. Mechanism of Corrosion-Fatigue Failure of Metals 80

PROBLEMS OF ENDURANCE-TESTING METHODS

Lebedev, I.A., T.K. Marinets, and A.I. Yefremov. Investigating the Cyclic Strength of Metals by Plotting a Fatigue Diagram 97

Oding, I.A., and S. Ya. Gurevich. Determining the Dependence of the Cyclic Coefficient of the Notch Sensitivity of Metals on the True Stress Concentration Coefficient 106

ENDURANCE TESTING OF PARTS

Kudryavtsev, I.V., and N.M. Savvina. Fatigue Strength of Large Plates 116

Raskin, N.M., and L.V. Bukalova. Fatigue Strength of Roller Chains 129

Raskin, N.M., and N.A. Bagramov. Corrosion-Fatigue Strength of Pump Rods 138

Baranova, N.B. Connection Between the Strength of Materials and of That of the Part Under Effect of Static, Cyclic and Impact Loads 148

Zil'berg, Yu. Ya., and A.P. Bogidzhanova. Short-Time Tests for Fatigue of Bimetallic Specimens With Bearing Alloy 155

AVAILABLE: Library of Congress (TA460.A377)

Card 4/4

VK/wrc/mas
11-9-60

RASKIN, N.M.

APPROVED FOR RELEASE: Tuesday, August 01, 2000 CIA-RDP86-00513R0013442

"APPROVED FOR RELEASE: Tuesday, August 01, 2000 CIA-RDP86-00513R001344

RASKIN, S.

Always with the people. Sov.foto 22 no.1:9 Ja '62. (MIRA 15:1)

1. Fotokorrespondent gazety "Sovetskaya Rossiya".
(News photographers)

APPROVED FOR RELEASE: Tuesday, August 01, 2000 CIA-RDP86-00513R0013442

"APPROVED FOR RELEASE: Tuesday, August 01, 2000 CIA-RDP86-00513R001344

SHIBALOV, Aleksandr Nikanorovich; RASKIN, Samuil Grigor'yevich; DANILEVSKAYA, O.N., red.; LEVONEVSKAYA, L.G., tekhn. red.

[One million domestic fowl] 1000 000 golov ptitsy. Leningrad, Lenizdat, 1960. 90 p. (MIRA 15:1)

1. Sekretar' Gatchinskogo gorodskogo komiteta Kommunisticheskoy partii Sovetskogo Soyuza (for Shibalov). 2. Redaktor rayonnoy gazety "Gatchinskaya pravda" (for Raskin).
(Poultry)

APPROVED FOR RELEASE: Tuesday, August 01, 2000 CIA-RDP86-00513R0013442

"APPROVED FOR RELEASE: Tuesday, August 01, 2000 CIA-RDP86-00513R001344

1ST AND 2ND ORDERS

PROCESSES AND PROPERTIES INDEX

"Wings" of the Rayleigh line and viscosity of liquids. R. F. Gross and Sh. Rankin. *Bull. acad. sci. U.R.S.S., Sér. phys.* 9, 184-5(1945).—The continua ("wings") on both sides of the Rayleigh line have been attributed by Raman to the rotation of mols. in the liquid. The authors investigated liquids with high η (polystyrene) and great changes of η (salol). The independence of the appearance of the "wings" of η is considered as a proof for the hypothesis that the continua must be attributed to mol. oscillations in the liquid analogous to mol. vibrations in crystal lattices. S. Pakswer

ASM-SLA METALLURGICAL LITERATURE CLASSIFICATION

APPROVED FOR RELEASE: Tuesday, August 01, 2000 CIA-RDP86-00513R0013442

"APPROVED FOR RELEASE: Tuesday, August 01, 2000 CIA-RDP86-00513R001344

FA 35/49T90

USSR/Physics Sep 48
Crystals - Lattices
Spectrum - Analysis

"Dispersion Spectra of Small Particles of Diphenyl Methane and Phenol in the Crystalline and Liquid States and the Problem of the Formation of Loops in Raleigh's Lines," Sh. Sh. Raskin, Phys Inst Leningrad State U, 3½ pp

"Dok Ak Nauk SSSR" Vol LXII, No 1

Continues study of certain peculiarities in dispersion spectra of diphenyl methane and phenol crystals, discovered while investigating dispersion spectra of a number of organic crystals from

35/49T90

FDB

USSR/Physics (Contd) Sep 48

standpoint of relation between these spectra and the structure and symmetry of crystal lattices. Submitted by Acad A. N. Terenin, 9 Jul 48.

35/49T90

RASKIN, SH. SH.

APPROVED FOR RELEASE: Tuesday, August 01, 2000 CIA-RDP86-00513R001344

"APPROVED FOR RELEASE: Tuesday, August 01, 2000 CIA-RDP86-00513R001344

RASKIN, SH. SH.

PA 27/49T93

USSR/Physics Jan 49
Crystals, Organic
Crystals - Oscillations

"Relay Frequencies in Diffusion Spectra of Molecular Crystals and the Spectrum of d-Tartaric Acid," Sh. Sh. Raskin, F. I. Skripov, 4 pp

"Dok Ak Nauk SSSR" Vol LXIV, No 3, p. 317-20

Attempts to refute Bagavantam's statement that translation frequencies are very low in value, and have negligible intensity in the spectrum. Makes the provisional conclusions: (1) possibility of translation frequencies appearing must be considered when

[redacted] 27/49T93

USSR/Physics (Contd) Jan 49

analyzing spectra of molecular crystals, and (2) frequencies of intermolecular oscillations in organic crystals are not necessarily bounded by 120 cm^{-1}, but may be considerably higher. Submitted 9 Jul 48.

[redacted] 27/49T93

APPROVED FOR RELEASE: Tuesday, August 01, 2000 CIA-RDP86-00513R001344

"APPROVED FOR RELEASE: Tuesday, August 01, 2000 CIA-RDP86-00513R001344

PROCESSES AND PROPERTIES INDEX

2

C A

Phonon characteristics of the dynamics of molecular crystal lattices. [illegible], A. V. Sokhotsev, and V. I. Sharpov. *Doklady Akad. Nauk S.S.S.R.* 60, 817-40(1948); cf. *C.A.* 43, 2872h.—For the interpretation of the spectrum, the theory is discussed that besides rotational oscillations, translation effects may also contribute to the phenomena. This idea is based on model systems of linear mol. lattices (with diatomic mols. and one mol. in the elementary cell) in which the conditions for a quasi-elastic deformation are evolved in a system of Lagrange equations of the second degree. The potential energy of the interaction of every mol. on adjacent cells gives solutions of the equations for the translational and rotational oscillations which depend on the mass and the moment of inertia of the mol. While the symmetry of the lattice strictly postulates certain quasielastic coeffs. to be eliminated by compensation, there may be deviations from the ideal centric symmetry which bring about differences in the spectral contributions of the translational and rotational distortions, in the generalized cases which are more closely related to the conditions in real three-dimensional molecule crystals, e.g. of org. compds. with H bonds. W. E.

ASB-SLA METALLURGICAL LITERATURE CLASSIFICATION

APPROVED FOR RELEASE: Tuesday, August 01, 2000 CIA-RDP86-00513R0013442

"APPROVED FOR RELEASE: Tuesday, August 01, 2000 CIA-RDP86-00513R001344

RASKIN, SH. SH.

Poliskova, I. D., Raskin, Sh. Sh., Sechkarev, A. V. and Skripov, F. I. Spectra of combination dispersion of some organic substances with a hydrogen bond in various phase states. Pages 419 - 425.

Scientific Research Inst. of
Physics of
The A. A. Zhdanov
Leningrad State Uni.

SO: Bulletin of the Academy of Sciences, Izvestia, (USSR) Vol. 14, No. 4. (1950) Series on Physics.

APPROVED FOR RELEASE: Tuesday, August 01, 2000 CIA-RDP86-00513R0013442

"APPROVED FOR RELEASE: Tuesday, August 01, 2000 CIA-RDP86-00513R001344

USSR/Physics - Raman Spectra 11 Sep 52

235T103

"Occurrence of Certain Peculiarities in the Raman Spectra of Substances With Hydrogen Bond," Sh. Sh. Raskin, A. V. Sechkarev

"Dok Ak Nauk SSSR" Vol 86, No 2, pp 277-280

In studying the scattering spectrum of benzoic acid crystals the authors observed a group of 17 lines in the region 2,500-3,000 cm^{-1}, which one would expect ordinarily to reveal frequencies of the hydrogen bond. Therefore, investigations were continued in the Raman spectra of liquid benzoic acid at low temps. Conclude that during the analysis of spectra of compds with hydrogen bond in the

235T103

region of small frequencies one must take into consideration the possibility that intramol deformational (strain) oscillations may fall in this region. Submitted by Acad A. N. Terenin 16 Jul 52.

235T103

RASKIN, Sh. Sh.